Like any product bearing the "MITSUBISHI" name our materials handling equipment benefits from the tremendous heritage, huge resources and cutting-edge technology of one of the world's largest corporations – Mitsubishi Heavy Industries Group.

Engineering spacecraft, jet planes, power plants and more, MHI specialises in those technologies where performance, dependability and superiority decide your success or failure...

So when we promise you quality, reliability and value for money, you know it's a guarantee we have the power to deliver.

That's why every model in our award-winning and comprehensive range of lift trucks and warehouse equipment is built to a high specification – to ensure it keeps working for you. Day after day. Year after year. Whatever the job. Whatever the conditions.

YOU'LL NEVER WORK ALONE

As your local authorised dealer, we are here to keep your trucks working – through our extensive experience, our technical excellence and our commitment to customer care.

We are your local experts, backed by efficient channels to the entire organisation of Mitsubishi Forklift Trucks.

No matter where you are, we are close by – with the capability to meet your needs.

Discover how Mitsubishi Forklift Trucks give you more from your local authorised dealer or when you visit our website www.mitforklift.com.sg

Performance specifications may vary depending on standard manufacturing tolerances, vehicle condition, types of tyres, floor or surface conditions, applications or operating environment. Trucks may be shown with non-standard options. Specific performance requirements and locally available configurations should be discussed with your distributor of Mitsubishi forklift trucks. We follow a policy of continual product improvement. For this reason, some materials, options and specifications could change without notice.

© 2023 by MLAP. All Rights Reserved. All registered trademarks are the property of their respective owners. Printed in Singapore.

FMIT0201 (10/2023)

MITSUBISHI FORKLIFT TRUCKS

MOVE THE WORLD FORWARD

MITSUBISHI HEAVY INDUSTRIES GROUP

GRENDIA 1.5 - 3.5 TONS

INTERNAL COMBUSTION PNEUMATIC TYRE

F(D)(G)15-35(C)P(T)(D)(H)

WHEN RELIABILITY IS EVERYTHING...

MITSUBISHI FORKLIFT TRUCKS

GRENDIA

F(D)(G)15-35(C)P(T)(D)(H) Series 1.5 - 3.5 TONS

Internal Combustion Pneumatic Tyre

CUSTOMIZED TO YOUR OPERATIONAL NEEDS

Effortless Inspection and Maintenance

Simplified inspection and maintenance become a reality with an entirely extendable engine hood, removable side panels, and strategically centralised maintenance stations. Furthermore, intervals between oil changes and lubrication requirements contribute to decreased maintenance costs.

PUSHING BOUNDARIES

Propelling Advanced Performance

By integrating new technologies, Mitsubishi's new Grendia Forklift Trucks set new benchmarks for operational excellence while maintaining unwavering environmental consciousness. The innovative engine system within Mitsubishi's Grendia lineup demonstrates exceptional fuel efficiency and minimal emissions, surpassing global eco-standards. Beyond its revolutionary engine, Grendia prioritises operator well-being and heightened security. Each forklift in the Grendia lineup seamlessly incorporates an Integrated Presence System (IPS), reinforcing safety measures and mitigating accident risks. Enhanced by LCD graphic displays and digital monitoring systems, Mitsubishi's Grendia Forklift Trucks epitomise heightened safety and efficiency. This is the future of forklifts, available today.

EMBRACING ENVIRONMENTAL CHALLENGES TODAY AND TOMORROW

Advanced Electronically Controlled Gasoline Engine

Mitsubishi's Grendia Forklift Trucks comes equipped with a standard gasoline electronic control engine that leads the industry in integrating non-electronically controlled fuel injection and three-way catalytic muffler. Evolving further in our new lineup, this technology achieves exceptional environmental standards while maintaining peak performance and steadfast reliability. The engine has wheelspin suppression that improves overall fuel efficiency and reduces torque loss.

Dual-Level Speed Control for Enhanced Versatility

Mitsubishi's Grendia offers an automatic speed control with dual settings: HIGH for outdoor applications and LOW for indoor environments. Operators can seamlessly switch between these modes, striking the perfect balance between fuel efficiency and operational prowess.

Power / Efficiency Mode Selection

Customised to diverse tasks, Mitsubishi's Grendia Forklift Trucks provide two power modes: POWER mode, optimising output, and SOFT mode, prioritising fuel efficiency and reduced noise levels. Opting for SOFT mode leads to a remarkable 13% reduction in carbon emissions compared to POWER mode.

Starter Protection Control Function

A. Starter Long-Term Energization Prevention Function

If the key switch remains in the start position for a certain period, cranking will be forcibly stopped. It prevents over-cranking and protects the engine.

B. Starter Re-Jumping Prevention Function

Cranking after starting the engine is prohibited. The engine can be re-cranked after a certain period had passed after the starter is turned off, protecting the engine.

Enhanced Diesel Engine with Environmental Upgrades

Maintaining the esteemed performance of our renowned Diesel Engine, Mitsubishi's Grendia Forklift Trucks now incorporate eco-friendly enhancements. These upgraded engines maintain low emission levels while upholding horsepower and unwavering reliability.

Designed for Operator Comfort and Reduced Fatigue

Encompassing features such as a low-noise engine, enhanced engine compartment soundproofing, and floor-level noise reduction, Mitsubishi's Grendia Forklift Trucks establish a serene operator and workspace environment.

Steering Synchronisation for Effortless Precision

Equipped with comprehensive hydrostatic steering, maintaining straight paths in confined areas, like containers, can pose challenges. Mitsubishi's Grendia Forklift Trucks deploy a steering synchronizer that actively detects and corrects misalignments, ensuring seamless linear motion without constant steering adjustments.

WHEEL SPIN SUPPRESSION ADAPTION FUNCTION (GASOLINE ELECTRONIC ENGINE)

1) The throttle is set to operate slowly in response to pressing on the accelerator, so that the throttle is not fully activated even when the accelerator is fully pressed down. Reduce loss torque such as torque control stall by gradually open the throttle with slope in consideration of power performance and the accelerator opening features.

2) Optimized throttle opening to improve fuel efficiency. Conventionally, over-speeding above the rated speed of 2,700 rpm was controlled by retarding the ignition timing. => The above two controls reduce unnecessary fuel injection and improve fuel efficiency.

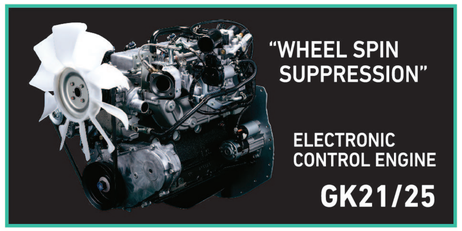

SAFETY AT THE FOREFRONT: PIONEERING AND RELIABLE SAFETY SOLUTIONS PROTECT OPERATORS AND WORKSPACES

Integrated Presence System

Mitsubishi's Grendia lineup integrates the Integrated Presence System (IPS), a proactive safety solution meticulously designed to identify potential hazards before they transform into accidents. By ensuring operator safety during vehicle operation and mitigating non-seated errors, this system serves as a robust shield for both operators and workplaces against potential risks.

IPS
INTEGRATED PRESENCE SYSTEM

Seamlessly Embedded Digital Monitoring

Within the operator's cabin, digital interfaces offer a streamlined approach to monitoring systems and controls. Activating upon ignition, the digital panel swiftly provides insights into speed, load weight, and system status.

Mast and Travel Interlock

Incorporating a mast and travel interlock mechanism, Mitsubishi's Grendia lineup seamlessly interacts with the operator's seat. In scenarios where the operator is not seated, this system automatically immobilises mast functions and, for torque-converter models, vehicle movement. This sophisticated feature serves as a barrier against harm to both individuals and property.

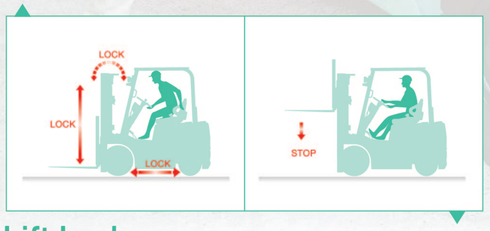

Lift Lock

Upon ignition deactivation, the fork on Mitsubishi's Grendia lineup locks automatically, maintaining its position even if the lift lever is accidentally displaced or shifted.

Neutral Safety Guarantee

Present in all vehicles, including torque-converter-equipped and direct drive models, an embedded Neutral Safety system prevents engine ignition unless the forward/backward lever is positioned in neutral.

Unobstructed Front Vision, Clear Rear Visibility

Setting itself apart from other forklifts, Mitsubishi's Grendia lineup boasts unimpeded front visibility extending from fork tip to mast apex. Enhanced rear visibility is achieved through the compact tail design.

Elevated Rear Combination Lighting

All Mitsubishi's new Grendia forklifts are equipped with high-mounted rear combination lamps placed above the protective head guard, delivering unmistakable braking and stopping signals to following vehicles and pedestrians.

UNPARALLELED PERFORMANCE, MIGHTY LIFTING STRENGTH

Extraordinary Lifting Capability

Mitsubishi's Grendia lineup stands as a testament to engineering excellence, boasting a low centre of gravity frame that meticulously optimises vehicle balance and stability during lifting tasks. This intricate engineering leads to elevated load capacity with unmatched stability. The high-torque, high-power engine guarantees a steadfast lift speed, irrespective of the load, empowering operators to amplify efficiency.

EXCEPTIONAL LIFTING COMPETENCE

Lift speed:
640mm/s (when loaded)
660mm/s (when not loaded)

No capacity deration up to a height of 4 metres (2-stage mast)

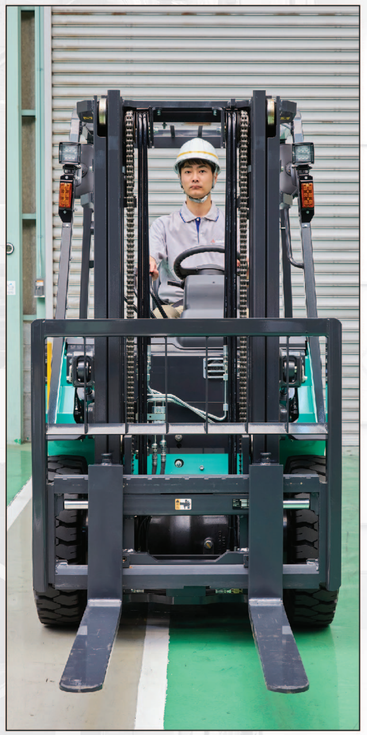

ELEVATING PRECISION. REDEFINING PERFORMANCE.

Reliable Descent Control

Inherent within Mitsubishi's Grendia lineup, descent control takes the spotlight. Activating as the fork gracefully nears the ground, this automated marvel ensures load security, adeptly countering sudden drops or impacts, thus augmenting load handling safety.

POWER IN ACTION

Meticulously engineered, Mitsubishi's Grendia forklifts seamlessly integrate a high-power engine and advanced transmission, choreographing an impeccably smooth initiation of motion and acceleration. This dynamic partnership guarantees unwavering traction even on inclines. The infusion of a dual-servo system amplifies control during braking and stopping, fortifying the bedrock of operational safety.

Effortless Acceleration

Achieving 10-meter acceleration in a swift (unloaded) • FD25PT

3.1 seconds

Robust Ascent Capability

Sustaining a 12-degree uphill speed

5.0km/h (unloaded) • FD25PT

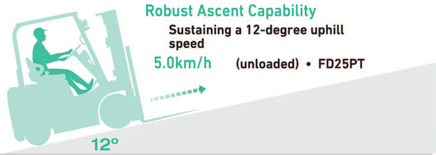

Exceptional Steering Agility

Exhibiting agile minimal turning radius

1950mm • FD15PT

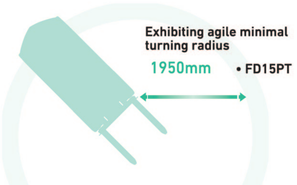

Mitsubishi's Grendia forklifts underscore their prowess within compact environments such as warehouses

Right angle stacking aisle width

3650mm • FD15PT

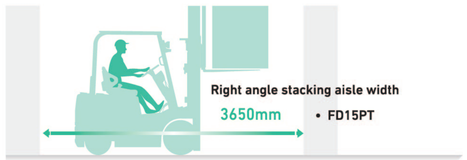

SMOOTH OPERATION. OPERATOR ASSURANCE.

Integrated Comfort and Control

Infused with a suspension seat featuring a hip support mechanism, the Mitsubishi Grendia range upholds operator well-being as a top priority. This seat offers personalised adjustments for both position and recline, ensuring optimal comfort tailored to individual body contours. Enhancing safety vigilance, the seat belt integrates a warning light, while the soft-grip handle streamlines ingress and egress.

- For meticulous manoeuvres, the **inching pedal** provides finesse in control.
- With effortless effort, the **electric shift lever** glides seamlessly back and forth
- Enhanced convenience is ensured with **optional function switches** thoughtfully positioned on the dashboard's right side.
- Braving outdoor conditions becomes second nature with the inclusion of an **acrylic roof (option)**, effortlessly installable or removable.
- Simplifying operation, the **combination switch** seamlessly integrates indicator and headlight controls.
- Adapting to varying preferences, the **tiltable steering column** elevates driving ergonomics.
- Prioritising reduced vibration, the **power-train full floating structure** is fortified by vibration-absorbing rubber mounts.
- Seamless steering is a hallmark, facilitated by the fully **hydraulic power steering system**, enabling impeccable control even in stationary tasks.
- Colour display. Visually clear **LCD colour display** allows for easy reading and interpretation of the key operator signals.

OPTIONAL COMPONENTS

• FINGERTIP CONTROL LEVER / ARMREST FNR SWITCH

Forward and Reverse Switching (**FNR** switch controller) at armrest will be replaced as the Standard setting. (If the **FNR** switch is attached, there is no forward and backward switching lever under the steering.)

Fingertip control. A function that allows cargo handling operations such as lifts and tilts to be performed with fingertip operation. This can be operated with arm on the armrest.

• SINGLE CONTROL LEVER

Lift up/down and tilt forward/backward operation with a single lever.

• SMOOTH-RUN SYSTEM

Reduces the vibration of the load during lift operation and driving to prevent the load from collapsing. An accumulator is mounted on the step.

• TILT HORIZONTAL CONTROL

- Tilt horizontal control button enables tilt forward stops at horizontal position of forks.
- By pressing the tilt horizontal support button while operating the lever, difficult tilt horizontal work can be easily performed.

• LASER POINTER

Laser pointer is indicated when the fork is in horizontal position, making it possible to visually grasp the fork height. (The LED lamp attached to the mast indicates that it is horizontal.)

• SMOOTH SHIFT

*This option is only available only for gasoline truck with torque convertor transmission.

(Transmission Full Reverse Protection)

Transmission Protection Function.

a. A function that changes shifts only when a truck speed is low (4.5 km/h or less). It is necessary to release the accelerator once to change shifts.

Sudden Starts Prevention Function

b. When Forward or Reverse is applied, the gear does not switch to Forward or Reverse while the engine speed is high.

ENGINE CUT OFF FUNCTION (AUTO STOP)

(Only Electronic Controlled Engine) Prevent idling.

Default: 60 seconds setting.

a. Engine Stop

b. Power off for electric components connected to electric circuit below ignition switch such as meter panel, engine and so on.

c. Excepted components; VCM, lamps and horn.

Reduces excess fuel consumption due to unnecessary idling.

SPECIFICATIONS

	CHARACTERISTICS									
1.1	Manufacturer (abbreviation)			MITSUBISHI	MITSUBISHI	MITSUBISHI	MITSUBISHI	MITSUBISHI	MITSUBISHI	MITSUBISHI
1.2	Manufacturer's model designation			FD15P(T)(D)	FD18P(T)(D)	FD20CP(T)(D)	FD20P(T)(D)	FD25P(T)(D)	FD30P(T)(D)	FD35P(T)(D)
1.3	Power source: Battery, Diesel. LPG, Petrol			Diesel	Diesel	Diesel	Diesel	Diesel	Diesel	Diesel
1.4	Operator type: pedestrian, (operator)-standing, -seated			Seated	Seated	Seated	Seated	Seated	Seated	Seated
1.5	Load capacity	Q	kg	1500	1750	2000	2000	2500	3000	3500
1.6	Load center distance	c	mm	500	500	500	500	500	500	500
1.7	Load distance, axle to fork face	x	mm	400	400	415	455	460	495	495
1.8	Wheelbase	y	mm	1400	1400	1400	1600	1600	1700	1700
	WEIGHTS									
2.1	Truck weight without load / including battery (simplex mast, lowest lift height)		kg	2530	2720	3030	3380	3680	4350	4740
2.2	Axle loading with maximum load, front/rear (simplex mast, lowest lift height)		kg	3520/510	3880/590	4330/700	4640/740	5430/750	6510/840	7220/1020
2.3	Axle loading without load, front/rear (simplex mast, lowest lift height)		kg	1060/1470	1000/1720	1020/2010	1450/1930	1430/2250	1750/2600	1670/3070
	WHEELS, DRIVE TRAIN									
3.1	Tyres: V=solid, L=pneumatic, SE=solid pneumatic - front/rear			L / L	L / L	SE / SE	L / L	L / L	L / L	L / L
3.2	Tyre dimensions, front			6.50-10	6.50-10	6.50-10/5.00	7.00-12	7.00-12	28x9-15	250-15
3.3	Tyre dimensions, rear			5.00-8	5.00-8	5.00-8/3.00	6.00-9	6.00-9	6.50-10	6.50-10
3.4	Number of wheels, front/rear (x=driven)			2x / 2	2x / 2	2x / 2	2x / 2	2x / 2	2x / 2	2x / 2
3.5	Track width (center of tyres), front	b10	mm	890	890	890	960	960	1060	1060
3.6	Track width (center of tyres), rear	b11	mm	900	900	900	980	980	980	980
	DIMENSIONS									
4.1	Mast tilt, forwards/backwards	∂/ß	°	6/12	6/12	6/12	6/12	6/12	6/12	6/12
4.2	Height with mast lowered (see tables)	h1	mm	1990	1990	1990	1990	1990	2015	2130
4.3	Free lfit (see tables)	h2	mm	115	115	120	140	140	145	145
4.4	Lift height (see tables)	h3	mm	3000	3000	3000	3000	3000	3000	3000
4.5	Overall height with mast raised	h4	mm	4055	4055	4055	4055	4055	4055	4055
4.6	Height to top of overhead guard	h6	mm	2065	2065	2065	2074	2074	2093	2103
4.7	Seat height	h7	mm	929	929	929	938	938	988	988
4.8	Tow coupling height	h10	mm	290	290	290	310	310	330	340
4.9	Overall length	l1	mm	3180	3220	3275	3405	3480	3805	3865
4.10	Length to fork face (includes fork thickness)	l2	mm	2260	2300	2355	2485	2560	2735	2795
4.11	Overall width	b1/b2	mm	1065 / 1480	1065 / 1480	1065 / -	1150 / 1640	1150 / 1640	1275 / 1710	1290 / 1710
4.12	Fork dimensions (thickness, width, length)	s/e/l	mm	35x100x920	35x100x920	45x100x920	45x100x920	45x100x920	45x122x1070	45x122x1070
4.13	Fork carriage to DIN 15 173 A/B/no			2A	2A	2A	2A	2A	3A	3A
4.14	Fork carriage width	b3	mm	920	920	920	1000	1000	1000	1000
4.15	Ground clearance under mast, with load	m1	mm	110	110	110	115	115	135	150
4.16	Ground clearance at center of wheelbase, with load (forks lowered)	m2	mm	150	150	150	160	160	190	200
4.17	Working aisle width with 1000 x 1200 mm pallets, crosswise	Ast	mm	3550	3580	3635	3855	3890	4075	4135
4.18	Working aisle width with 800 x 1200 mm pallets, crosswise	Ast	mm	3350	3380	3435	3655	3690	3875	3935
4.19	Working aisle width with 800 x 1200 mm pallets, lengthwise			3750	3780	3835	4055	4090	4275	4335
4.20	Turning circle radius	Wa	mm	1950	1980	2020	2200	2230	2380	2440
4.21	Minimum distance between centers of rotation	b13	mm	555	555	555	715	715	780	780
	PERFORMANCE									
5.1	Travel speed, with/without load		km/h	18.5/19.0	18.5/19.0	18.5/19.0	18.0/18.5	18.0/18.5	17.5/18.0	18.0/18.5
5.2	Lifting speed, with/without load		m/s	0.64/0.66	0.64/0.64	0.64/0.66	0.61/0.64	0.61/0.64	0.49/0.50	0.41/0.42
5.3	Lowering speed, with/without load		m/s	0.52/0.45	0.52/0.45	0.52/0.45	0.51/0.45	0.51/0.45	0.51/0.41	0.43/0.31
5.4	Rated drawbar pull, with/without load		N	12800/6800	12700/6500	12600/6500	15800/9400	15600/9300	15700/11200	14900/10500
5.5	Gradeability, with load		s	34	30	26	31	27	22	19
5.6	Service brakes (mechanical/hydraulic/electric/pneumatic			Hydraulic	Hydraulic	Hydraulic	Hydraulic	Hydraulic	Hydraulic	Hydraulic
	IC ENGINE									
6.1	Manufacturer / Type			S4Q2	S4Q2	S4Q2	S4S	S4S	S4S	S4S
6.2	Rated / Nominal output to ISO 1585**		kW	30.0	30.0	30.0	35.3	35.3	35.3	35.3
6.3	Rated speed to DIN 70 020		rpm	2500	2500	2500	2250	2250	2250	2250
6.4	Number of cylinders / cubic capacity		cm^3	4 / 2505	4 / 2505	4 / 2505	4 / 3331	4 / 3331	4 / 3331	4 / 3331
6.5	Fuel consumption according to VDI 80 cycle		l/h / kg/h	2.30/-	2.35/-	2.35/-	2.55/-	3.20/-	3.40/-	3.50/-
6.6	Max torque		Nm	131	131	131	185	185	185	185
6.7	Max torque at engine speed		rpm	1800	1800	1800	1700	1700	1700	1700
	MISCELLANEOUS									
7.1	Type of drive control			Powershift 1/1	Powershift 1/1	Powershift 1/1	Powershift 1/1	Powershift 1/1	Powershift 1/1	Powershift 1/1
7.2	Maximum operating pressure for attachments		bar	180	180	180	180	180	180	180
7.3	Oil flow for attachments		l/min	62	62	62	75	75	73	73
7.4	Noise level, value at operator's ear (EN 12053)		dB(A)	80	80	80	78	78	78	78
7.5	Towing coupling design / DIN type, ref.			pin	pin	pin	pin	pin	pin	pin

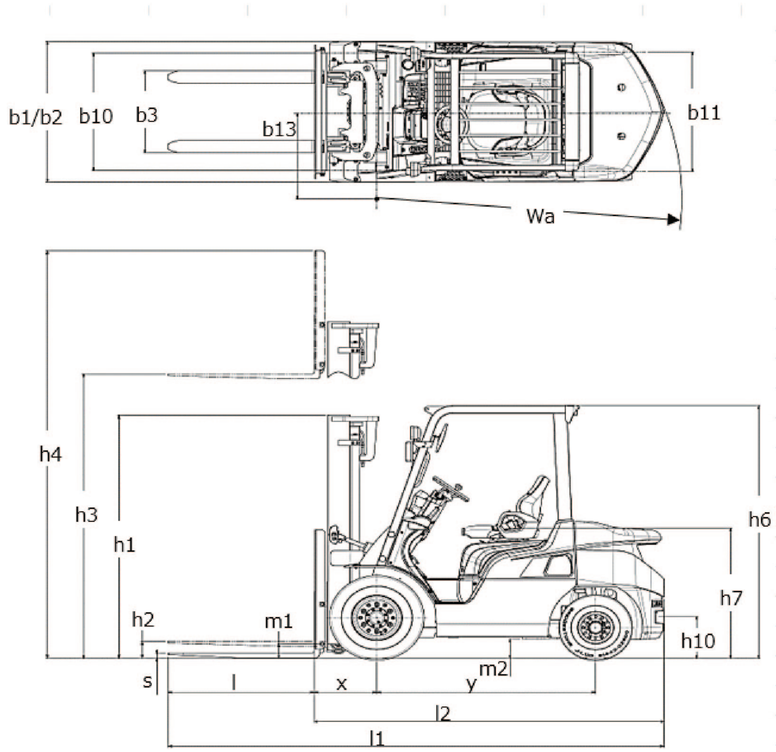

GRENDIA

INTERNAL COMBUSTION PNEUMATIC TYRE

F(D)(G)15-35(C)P(T)(D)(H)
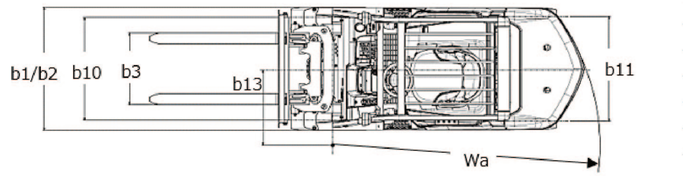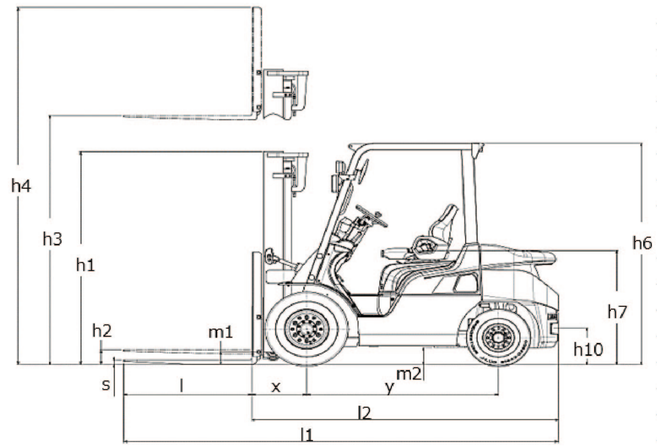
	CHARACTERISTICS											
1.1	Manufacturer (abbreviation)			MITSUBISHI	MITSUBISHI	MITSUBISHI	MITSUBISHI	MITSUBISHI	MITSUBISHI	MITSUBISHI	MITSUBISHI	MITSUBISHI
1.2	Manufacturer's model designation			FG15P(T)(D)	FG18P(T)(D)	FG20CP(T)(D)	FG20P(T)(D)	FG20P(T)(D)H	FG25P(T)(D)	FG25P(T)(D)H	FG30P(T)(D)	FG35P(T)(D)
1.3	Power source: Battery, Diesel. LPG, Petrol			Petrol/LPG	Petrol/LPG	Petrol/LPG	Petrol/LPG	Petrol/LPG	Petrol/LPG	Petrol/LPG	Petrol/LPG	Petrol/LPG
1.4	Operator type: pedestrian, (operator)-standing, -seated			Seated	Seated	Seated	Seated	Seated	Seated	Seated	Seated	Seated
1.5	Load capacity	Q	kg	1500	1750	2000	2000	2000	2500	2500	3000	3500
1.6	Load center distance	c	mm	500	500	500	500	500	500	500	500	500
1.7	Load distance, axle to fork face	x	mm	400	400	415	455	455	460	460	495	495
1.8	Wheelbase	y	mm	1400	1400	1400	1600	1600	1600	1600	1700	1700
	WEIGHTS											
2.1	Truck weight without load / including battery (simplex mast, lowest lift height)		kg	2490	2690	3010	3300	3300	3600	3600	4240	4630
2.2	Axle loading with maximum load, front/rear (simplex mast, lowest lift height)		kg	3510/460	3870/540	4320/660	4600/670	4600/670	5390/680	5390/680	6470/770	7180/950
2.3	Axle loading without load, front/rear (simplex mast, lowest lift height)		kg	1040/1430	990/1670	1010/1970	1410/1860	1410/1860	1390/2180	1390/2180	1710/2530	1630/3000
	WHEELS, DRIVE TRAIN											
3.1	Tyres: V=solid, L=pneumatic, SE=solid pneumatic - front/rear			L / L	L / L	SE / SE	L / L	L / L	L / L	L / L	L / L	L / L
3.2	Tyre dimensions, front			6.50-10	6.50-10	6.50-10/5.00	7.00-12	7.00-12	7.00-12	7.00-12	28x9-15	250 -15
3.3	Tyre dimensions, rear			5.00-8	5.00-8	5.00-8/3.00	6.00-9	6.00-9	6.00-9	6.00-9	6.50-10	6.50-10
3.4	Number of wheels, front/rear (x=driven)			2x / 2	2x / 2	2x / 2	2x / 2	2x / 2	2x / 2	2x / 2	2x / 2	2x / 2
3.5	Track width (center of tyres), front	b10	mm	890	890	890	890	890	960	960	1060	1060
3.6	Track width (center of tyres), rear	b11	mm	900	900	900	900	900	980	980	980	980
	DIMENSIONS											
4.1	Mast tilt, forwards/backwards	∂/ß	°	6/12	6/12	6/12	6/12	6/12	6/12	6/12	6/12	6/12
4.2	Height with mast lowered (see tables)	h1	mm	1990	1990	1990	1990	1990	1990	1990	2015	2130
4.3	Free lfit (see tables)	h2	mm	115	115	120	140	140	140	140	145	145
4.4	Lift height (see tables)	h3	mm	3000	3000	3000	3000	3000	3000	3000	3000	3000
4.5	Overall height with mast raised	h4	mm	4055	4055	4055	4055	4055	4055	4055	4055	4055
4.6	Height to top of overhead guard	h6	mm	2065	2065	2065	2074	2074	2074	2074	2093	2103
4.7	Seat height	h7	mm	929	929	929	938	938	938	938	988	988
4.8	Tow coupling height	h10	mm	290	290	290	310	310	310	310	330	340
4.9	Overall length	l1	mm	3180	3220	3275	3405	3405	3480	3480	3805	3865
4.10	Length to fork face (includes fork thickness)	l2	mm	2260	2300	2355	2485	2485	2560	2560	2735	2795
4.11	Overall width	b1/b2	mm	1065/-	1065/-	1065/-	1150 / 1640	1150 / 1640	1150 / 1640	1150 / 1640	1275 / 1710	1290 / 1710
4.12	Fork dimensions (thickness, width, length)	s/e/l	mm	35x100x920	35x100x920	45x100x920	45x100x920	45x100x920	45x100x920	45x100x920	45x122x1070	45x122x1070
4.13	Fork carriage to DIN 15 173 A/B/no			2A	2A	2A	2A	2A	2A	2A	3A	3A
4.14	Fork carriage width	b3	mm	920	920	920	1000	1000	1000	1000	1000	1000
4.15	Ground clearance under mast, with load	m1	mm	110	110	110	115	115	115	115	135	150
4.16	Ground clearance at center of wheelbase, with load (forks lowered)	m2	mm	150	150	150	160	160	160	160	190	200
4.17	Working aisle width with 1000 x 1200 mm pallets, crosswise	Ast	mm	3550	3580	3635	3855	3855	3890	3890	4075	4135
4.18	Working aisle width with 800 x 1200 mm pallets, crosswise	Ast	mm	3350	3380	3435	3655	3655	3690	3690	3875	3935
4.19	Working aisle width with 800 x 1200 mm pallets, lengthwise			3750	3780	3835	4055	4055	4090	4090	4275	4335
4.20	Turning circle radius	Wa	mm	1950	1980	2020	2200	2200	2230	2230	2380	2440
4.21	Minimum distance between centers of rotation	b13	mm	555	555	555	715	715	715	715	780	780
	PERFORMANCE											
5.1	Travel speed, with/without load		km/h	19.0/19.5	19.0/19.5	19.0/19.5	18.5/19.0	18.5/19.0	18.5/19.0	18.5/19.0	18.0/18.5	18.5/19.0
5.2	Lifting speed, with/without load		m/s	0.63/0.64	0.63/0.64	0.63/0.64	0.58/0.58	0.64/0.64	0.58/0.58	0.64/0.64	0.51/0.50	0.43/0.42
5.3	Lowering speed, with/without load		m/s	0.52/0.45	0.52/0.45	0.52/0.45	0.51/0.45	0.51/0.45	0.51/0.45	0.51/0.45	0.51/0.41	0.43/0.31
5.4	Rated drawbar pull, with/without load		N	14600/6800	14600/6400	14400/6500	14700/9100	17300/9100	14500/9000	17100/9100	17400/10900	16600/10400
5.5	Gradeability, with load		s	40	36	31	30	35	25	30	25	21
5.6	Service brakes (mechanical/hydraulic/electric/pneumatic			Hydraulic	Hydraulic	Hydraulic	Hydraulic	Hydraulic	Hydraulic	Hydraulic	Hydraulic	Hydraulic
	IC ENGINE											
6.1	Manufacturer / Type			GK21	GK21	GK21	GK21	GK25	GK21	GK25	GK25	GK25
6.2	Rated / Nominal output to ISO 1585**		kW	36.0	36.0	36.0	36.0	42.0	36.0	42.0	42.0	42.0
6.3	Rated speed to DIN 70 020		rpm	2700	2700	2700	2700	2700	2700	2700	2700	2700
6.4	Number of cylinders / cubic capacity		cm^3	4 / 2065	4 / 2065	4 / 2065	4 / 2065	4 / 2488	4 / 2065	4 / 2488	4 / 2488	4 / 2488
6.5	Fuel consumption according to VDI 60 cycle		l/h / kg/h	- / 2.70	- / 3.00	- / 3.40	- / 3.60	- / 3.90	- / 4.10	- / 4.50	- / 5.30	- / 6.00
6.6	Max torque		Nm	149	149	149	149	185	149	185	185	185
6.7	Max torque at engine speed		rpm	1800	1800	1800	1800	1400	1800	1400	1400	1400
	MISCELLANEOUS											
7.1	Type of drive control			Powershift 1/1	Powershift 1/1	Powershift 1/1	Powershift 1/1	Powershift 1/1	Powershift 1/1	Powershift 1/1	Powershift 1/1	Powershift 1/1
7.2	Maximum operating pressure for attachments		bar	180	180	180	180	180	180	180	180	180
7.3	Oil flow for attachments		l/min	60	60	60	60	60	60	60	60	60
7.4	Noise level, value at operator's ear (EN 12053)		dB(A)	79	79	79	79	79	79	79	79	79
7.5	Towing coupling design / DIN type, ref.			pin	pin	pin	pin	pin	pin	pin	pin	pin